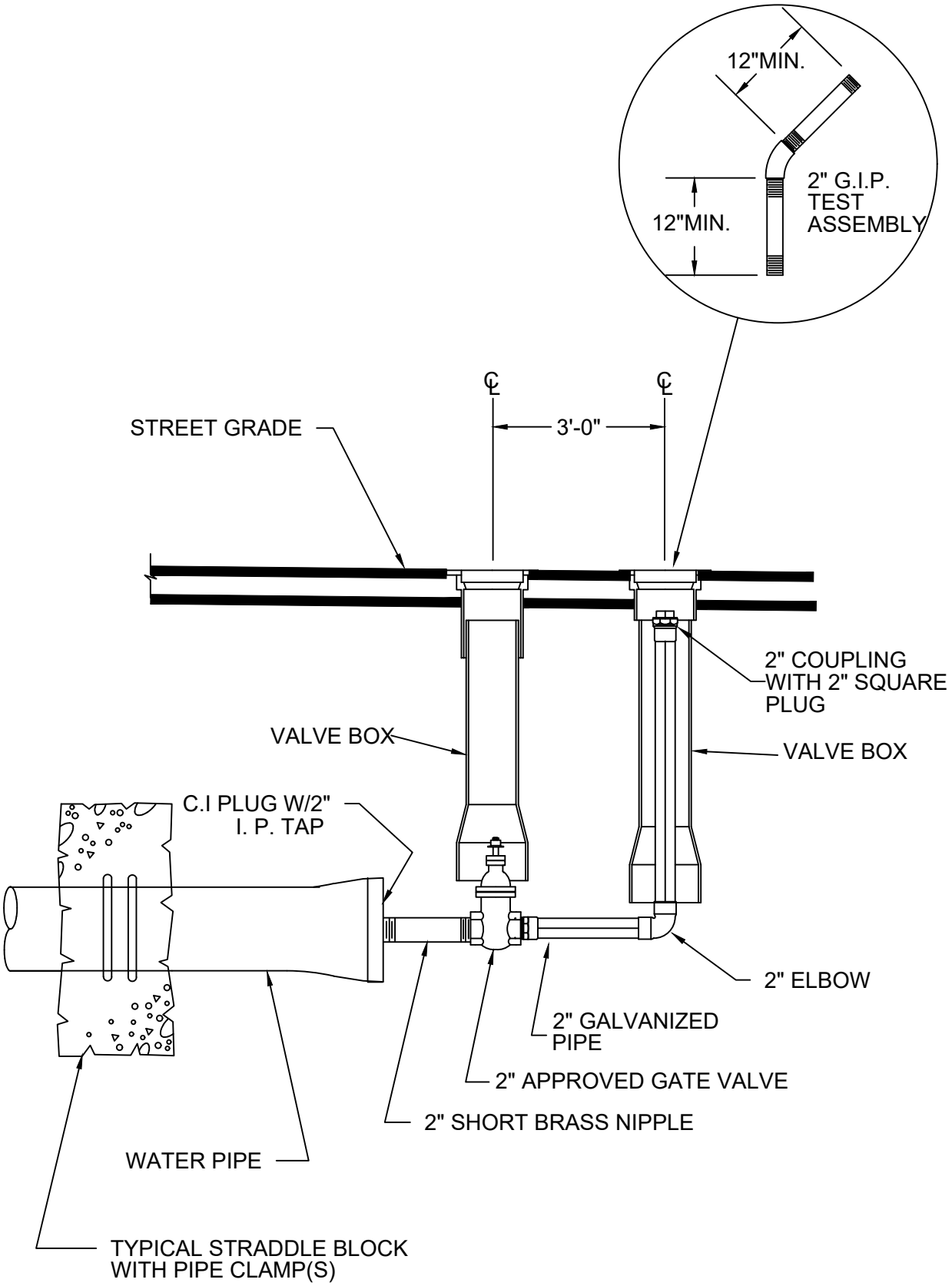

FOREST GROVE OREGON

TYPICAL 2" BLOWOFF ASSEMBLY

ENGINEERING DEPARTMENT
1924 COUNCIL STREET
P.O. BOX 326
FOREST GROVE, OR 97116

DRAWING NO. 411

SCALE NONE

\\w2k\eng\Eng Dept\STANDARD DETAILS\400s WATER\TYPICAL 2 INCH BLOWOFF ASSEMBLY.DWG

LAST REV. 9/21/23